WELCH TUNING SYSTEMS, INC.

# Installation Manual

MADE IN TAIWAN

**Thank you for purchasing the Welch Tuning System™ (WTS)!**

To get the most out of this premium drum hardware, and to install and use it in a safe manner, we urge you read this Installation Manual prior to installing and using WTS.

## INSTALLATION REQUIREMENTS:

- Experience using a drill and basic hand tools
- 7″ minimum tom tom shell depth
- 7.5″ minimum snare drum shell depth
- 8″ minimum shell diameter
- 26″ x 16″ maximum shell size
- 2.3mm triple-flanged hoops required for tom toms
- WTS die-cast hoops required for snare drums

(do NOT use triple-flanged hoops for snare drums)

## TOOLS REQUIRED:

- Flat work table or hard surface
- Electric drill
- Low-tack masking tape
- 3/8″ open-ended wrench
- 1/8″ Allen key
- T-25 torx bit
- 3/16″ drill bit
- Framing square or similar tool
- Pencil / marking utensil

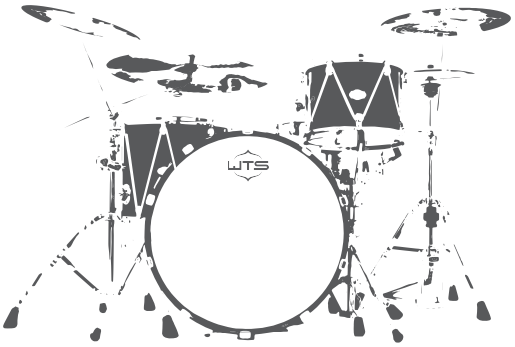

# Step 1: Print Layout Drawings

Visit www.wtsdrums.com/installation to download the WTS Scale Layout Drawings. Visit your local print shop and print the Layout Drawing in full color and actual size (do not scale up or down) for each size drum you plan to build. **Each sheet measures 36” x 36”.** This will serve as your layout mat for your build and will ensure proper installation.


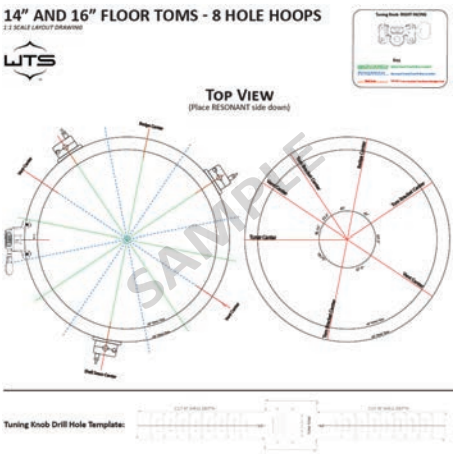


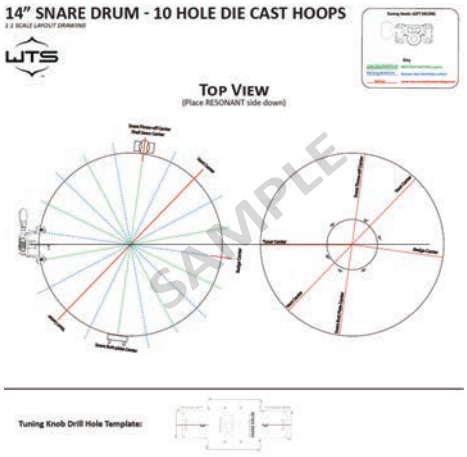

# Step 2: Layout Hardware Locations

**1. Place drum shell on appropriate WTS Scale Layout Drawing.** If there are particular grain patterns or special considerations regarding your particular shell, now is the time to align these features how you would like them to be seen in relation to the rest of the hardware. Also, be sure to place the correct side down on the Layout Drawing (resonant side down for toms and snares, batter side down for bass drums).

**2. Place masking tape in the general areas you will be marking the drum shell**, such as areas of the WTS tuning knob, floor tom leg mounts, bass drum spurs, snare throw off, etc.

**3. Align your square to the center line of every piece of hardware** and mark a vertical center line on your masking tape. Do this for every piece of hardware, and make sure the drum shell does not move in the process.

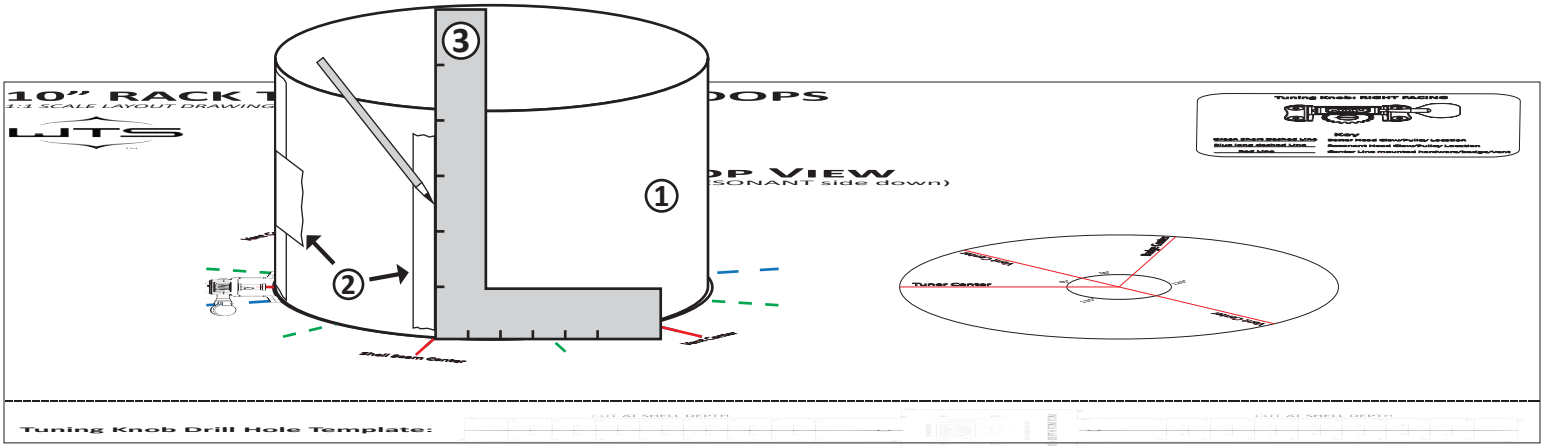


# Step 3: Drill for Tuning Knob (TA101)

**1. Cut out the Tuning Knob Drill Hole Template** located at the bottom of each WTS Scale Layout Drawing. Note that these are drum-specific. Cut the template at each line matching the depth of the shell, i.e., for a 10” deep drum, cut at the 10” line on each side:

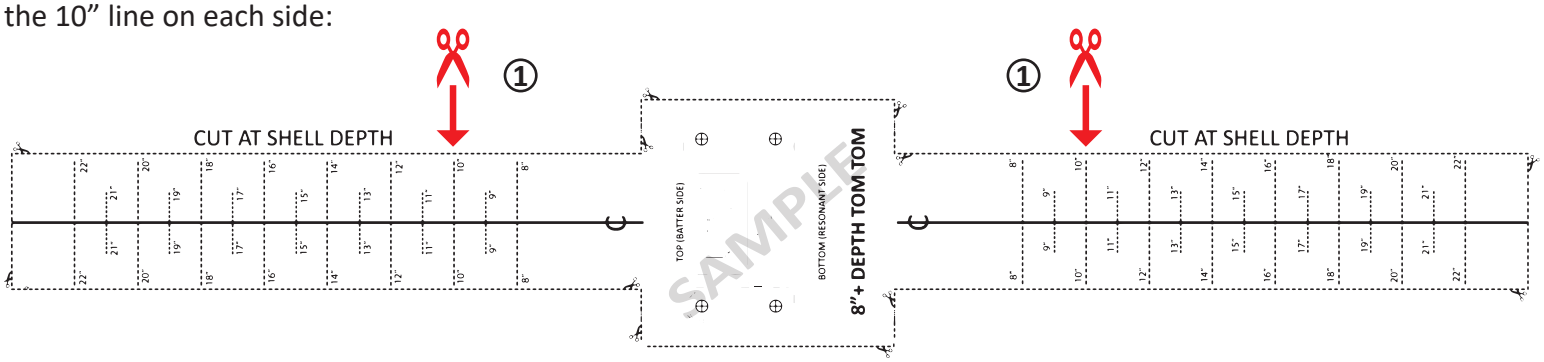


**2. Tape Drill Hole Template to shell** by aligning the center line of the template with the center line you have drawn on the shell for the tuning knob; align the top and bottom of the template to the bearing edge:

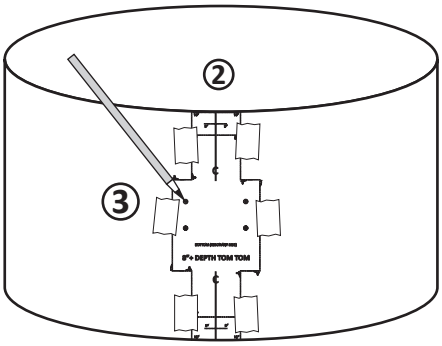


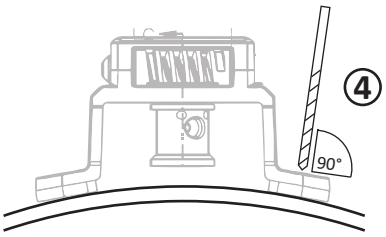


**3. Mark or center punch the hole location** through the template into the shell for each of the four holes for the tuning knob.

**4. Remove the Template** and carefully drill each of the holes with a 3/16” drill bit. Drill at an angle perpendicular (90°) in relation to the feet of the tuning knob bracket (do not drill through tuning knob bracket).

# Step 4: Install Tuning Knob and Assemble Hoops

## WELCH TUNING SYSTEM (WTS) COMPONENTS:

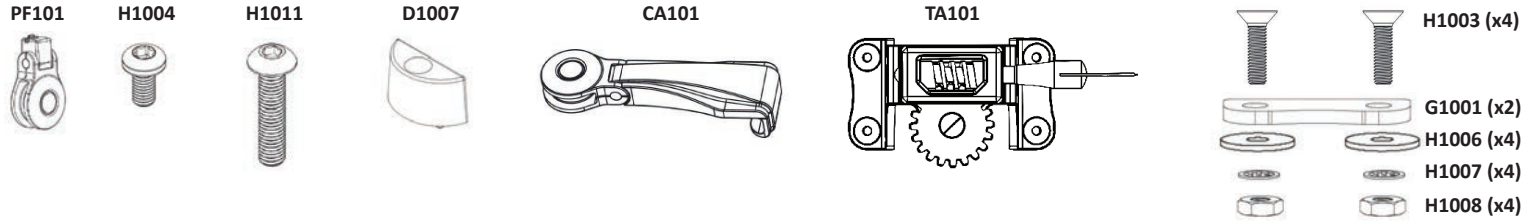


**1. Install the tuning knob (TA101) onto each shell.** Be sure to check your Layout Drawings to see if you should be using a right-facing tuning knob or a left-facing tuning knob.

**NOTE:**
- Make sure tuning knob is installed correct side up on tom toms and snare drums:

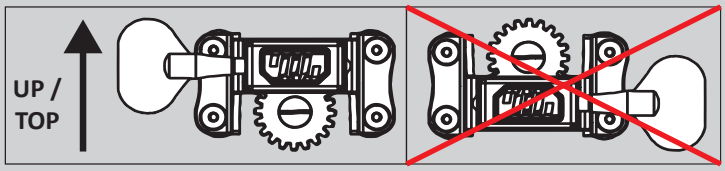


## TUNING KNOB (TA101) INSTALLATION

*Bolting to shell:*

1. Place rubber pads (G1001) and tuning knob (TA101) against outside of shell as shown in **Fig. 1**;
2. Align tuning knob (TA101) mounting holes with rubber pad holes (G1001) and holes drilled in shell. Assemble bolts (H1003) through tuning knob (TA101) mounting holes.
3. Assemble flat washer (H1006), tooth washer (H1007) and nut (H1008) on the inside of the shell as shown in **Fig 1.** Tighten nut until snug and the rubber pad begins to bulge, **do not over-tighten.**

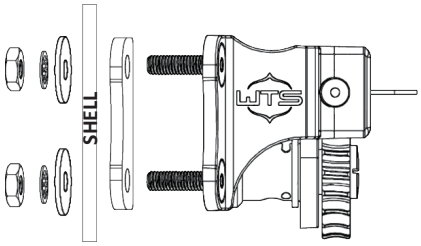


**Fig. 1**

**2. Assemble the drum hoops.** If you have purchased WTS Hardware without drum hoops, please follow the Pulley Fixture (PF101) Installation below. If you have purchased a WTS Hardware Kit with the Pulley Fixtures already assembled, move on to the Bass Drum Claw (CA101) installation.

## PULLEY FIXTURE (PF101) INSTALLATION

### Triple Flanged Hoops

1. Align the pulley fixture (PF101) under hoop ear using the ridge to align the pulley fixture (PF101) with the inside-back of the hoop hole **(Fig. 2)**;
2. Thread bolt (H1004) through the hoop, into the pulley fixture (PF101) **(Fig. 3)**. Tighten until snug, **do not over-tighten.**

**NOTE:** The pulley fixture ridge must stay inside the hoop hole for proper alignment **(Fig. 2)**.

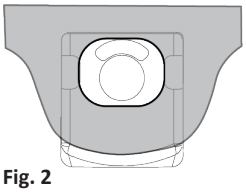

**Fig. 2**

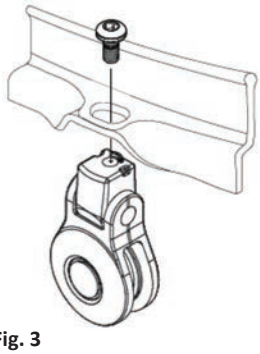

**Fig. 3**

### Cast Hoops

1. Place cast hoop spacer (D1007) inside ear of cast hoop **(Fig. 4)**;
2. Align pulley fixture (PF101) under cast hoop spacer (D1007) and allow the male tabs from the cast hoop spacer (D1007) to connect with the female indentations in the pulley fixture (PF101) **(Fig. 4)**;
3. Hold pulley fixture (PF101) in place **(Fig. 4)**;
4. Thread cast hoop bolt (D1007) through hoop hole, cast hoop spacer (D1007), and into pulley fixture (PF101) **(Fig. 4)**. Tighten until snug, **Do not over-tighten**.

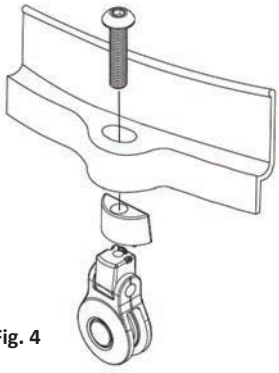

**Fig. 4**

## BASS DRUM CLAW (CA101) INSTALLATION

1. Place your bass drum hoop (inside edge down) onto the Bass Drum Layout Drawing.
2. Remove the outer half of the Velcro pad from each of the bass claws.
3. Stick each Velcro pad to the outside of the bass drum hoop, approximately 1/4" from the outside edge and centered on the GREEN DOTTED LINES of the Bass Drum Layout Drawing:

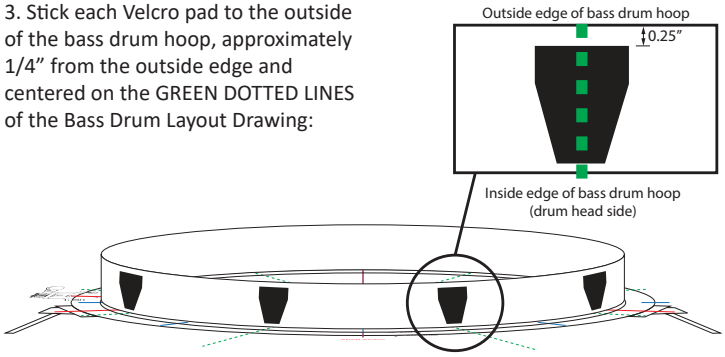


4. Attach bass drum claws to hoop.

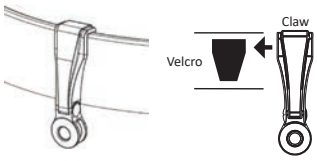


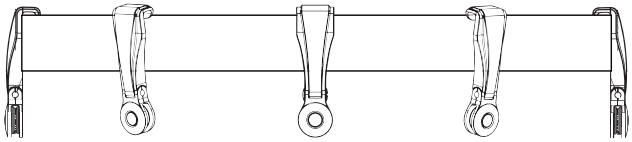

# Step 5: Test Assemble the Drum Shells (WTS Hardware Only)

**1. Assemble the drum shells with the hoops, tuning knob, and cable only.** By test assembling, you can confirm the locations of your other hardware (shown in RED), such as bass drum spurs, floor tom leg brackets, vents, badges, etc. It is very important that none of this additional hardware interferes with the WTS cable path.

**TIP:** Use the Layout Drawing as a guide to align the pulleys of the top and bottom hoops with the tuning knob.

## 12” TOM TOM ASSEMBLY

**1.** Bolt TA101-L to shell.

**2.** Place resonant head into bottom hoop.

**3.** Place shell onto resonant head.

**4.** Place batter head on shell.

**5.** Place top hoop over batter head.

**6.** Align hoops **(SIDE VIEW (A/B))**.

**7.** Assemble cable (follow instructions for replacing heads / cable in user manual).

**8.** Check that your fully assembled drum looks like the drawing below.

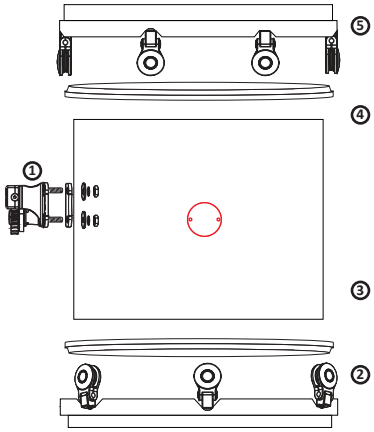


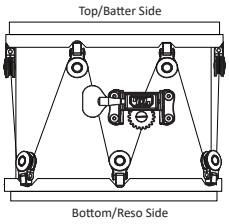


**SIDE VIEW (A)**

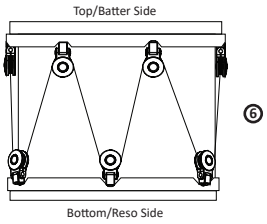


**SIDE VIEW (B)**

## FLOOR TOM ASSEMBLY

**1.** Place resonant head into bottom hoop.

**2.** Place shell onto resonant head.

**3.** Place batter head on shell.

**4.** Place top hoop over batter head.

**5.** Align hoops **(SIDE VIEW (A/B))**.

**6.** Assemble cable (follow instructions for replacing heads / cable in user manual.

**7.** Check that your fully assembled drum looks like the drawing below.

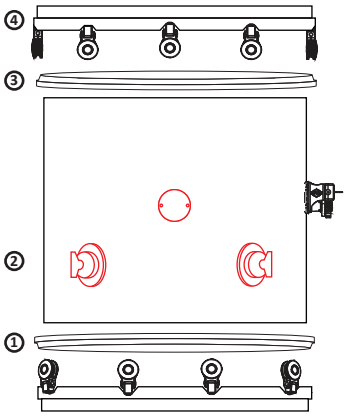


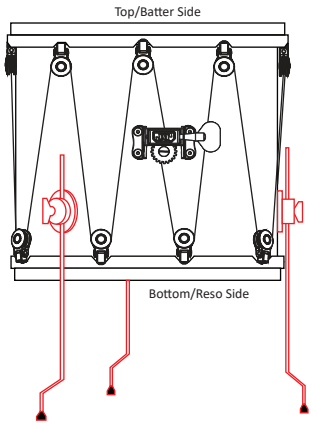


**SIDE VIEW (A)**

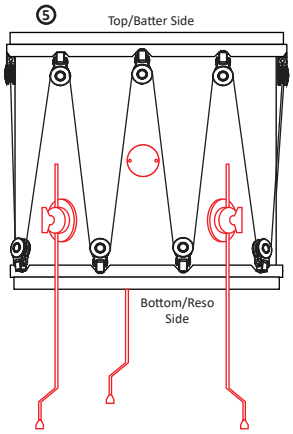


**SIDE VIEW (B)**

## BASS DRUM ASSEMBLY

**1.** Attach bass claws to bass hoops where Velcro is present **(Fig. 1)**.

**2.** Place front hoop on ground and resonant head into front hoop.

**3.** Place shell onto resonant head.

**4.** Place batter head on shell.

**5.** Place batter side hoop over batter head.

**6.** Align hoops **(TOP VIEW)**.

**7.** Assemble cable (follow instructions for replacing heads / cable in user manual).

**8.** Check that your fully assembled drum looks like the drawing below.

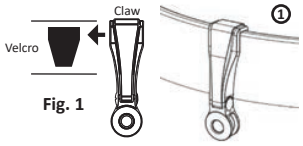


**Fig. 1**

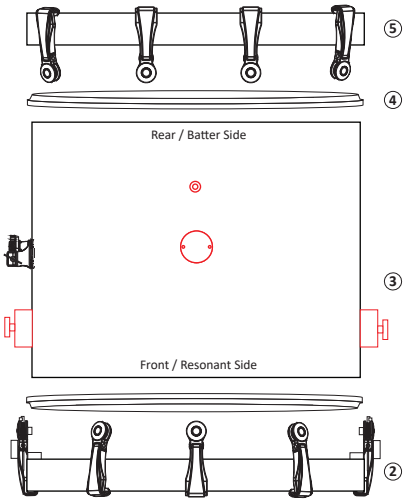


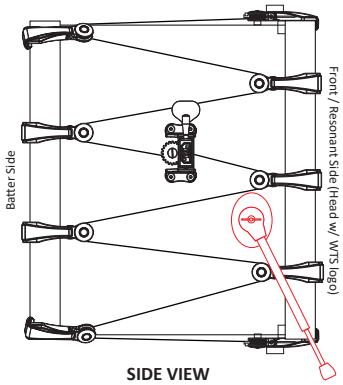


**SIDE VIEW**

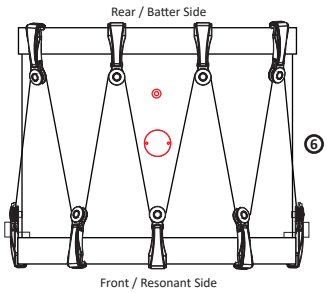


**TOP VIEW**

## SNARE DRUM ASSEMBLY

1. Follow same test assembly procedures as other drums.

2. Check that your fully assembled drum looks like the drawing below.

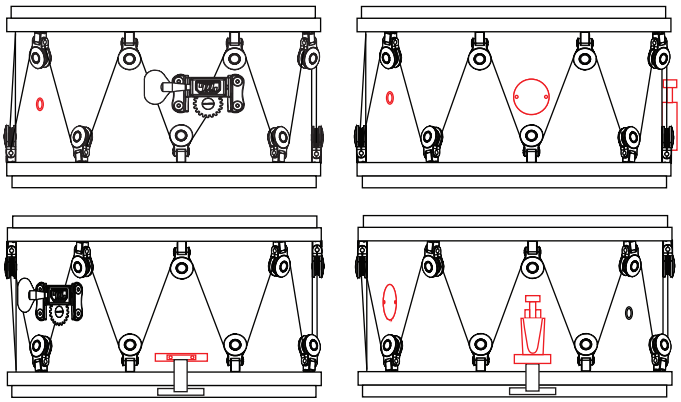

# Step 6: Drill and Install All Remaining Hardware

**1. After checking that all of your center line markings on the drum shell are correct** and confirming that nothing will interfere with the WTS cable path, you can now layout and drill for your remaining hardware, such as bass drum spurs, floor tom leg brackets, vents, badges, snare throw off, snare butt plate, etc.

**HELPFUL TIPS:**

- Make sure bass spurs do not interfere with the cable in both open and closed positions.
- Make sure the snare throw off can operate on or off without hitting the top pulley fixture or cable.
- Refer back to the WTS Layout Drawing for hardware location recommendations.

**2. The following recommendations may or may not apply to your chosen accessory hardware.** IT IS UP TO YOU TO CONFIRM THE PLACEMENT AND DRILL HOLE PATTERN FOR YOUR SPECIFIC ACCESSORY HARDWARE.

## Floor Tom Bracket Location

(Shown on 12” deep shell)

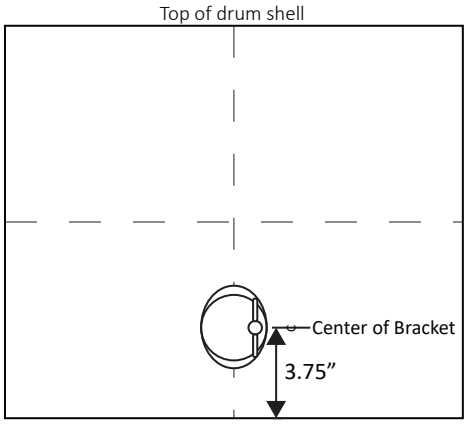


**SIDE VIEW**

## Bass Drum Spur Locations

(Shown on 14” deep shell)

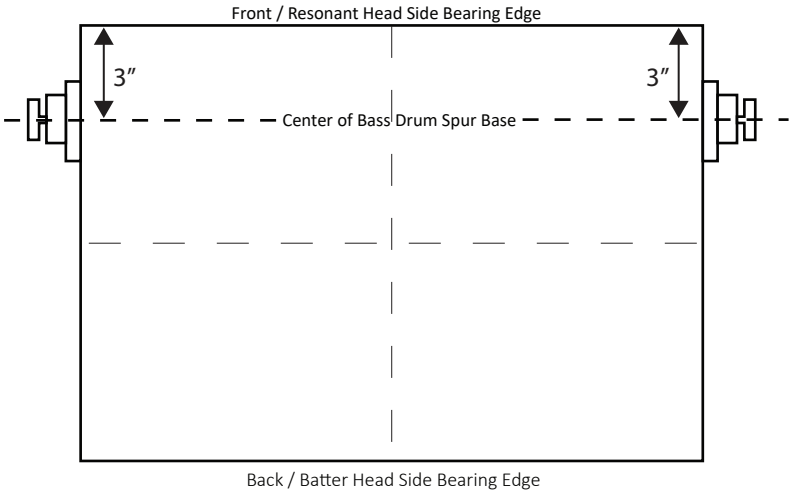


**TOP VIEW**

## Snare Drum Assembly Note:

When tightening snare heads down for the first time, flip the drum upside-down and place firm pressure on the side the hoop opposite the tensioner while tightening the cable to ensure hoops stay parallel (not lopsided).

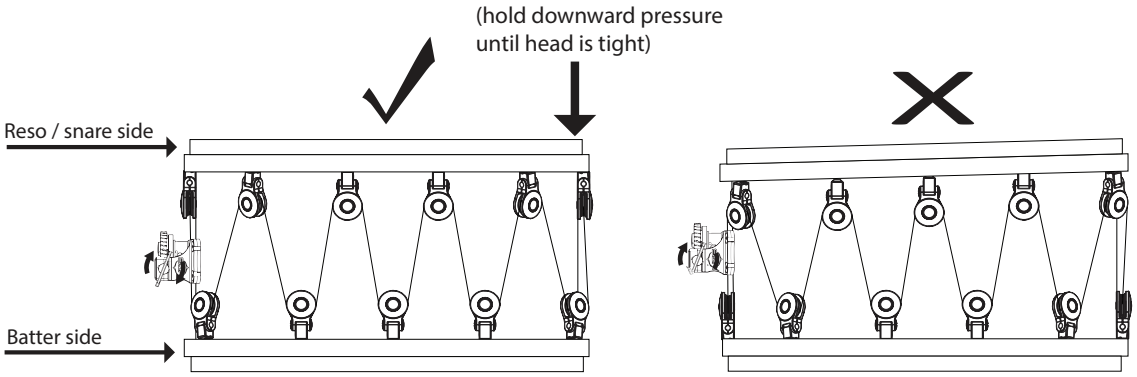

# Tuning Knob Orientation Guide

If you find you have incorrect tuning knob orientation, simply loosen tension on the cable and rotate the hoops. It may be necessary to unlace the cable.

## CORRECT:

Tuning knob is in correct relationship to the pulleys when:

1. In-line / centered with the cable path; and

2. Top pulley is on opposite side of the tuning knob handle.

**Left-Facing Tuning Knob** | **Right-Facing Tuning Knob**

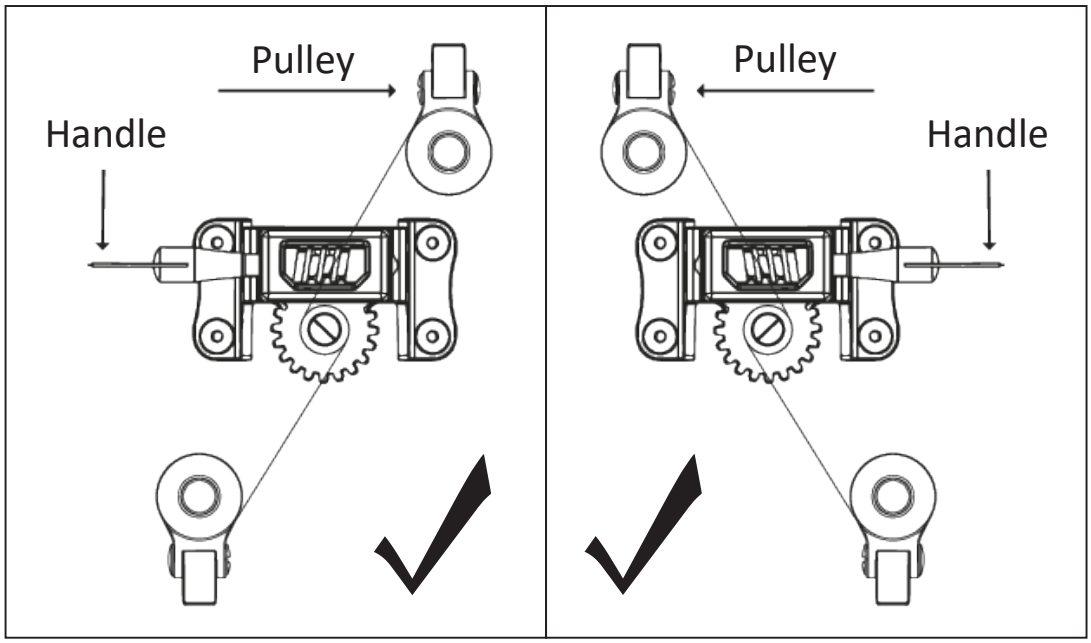


**NOTE:**

• Make sure tuning knob is installed correct side up on tom toms and snare drums:

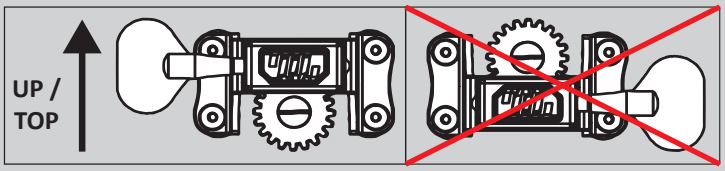


## INCORRECT:

Tuning knob is NOT in correct relationship to the pulleys when:

1. Top pulley is on the same side of the tuning knob handle (when this happens, it can be difficult to turn the tuning knob with the pulley in the way); and/or

2. Tuning knob is not in-line / centered with the cable path (this can cause uneven tension and cable wear).

**Left-Facing Tuning Knob** | **Right-Facing Tuning Knob**

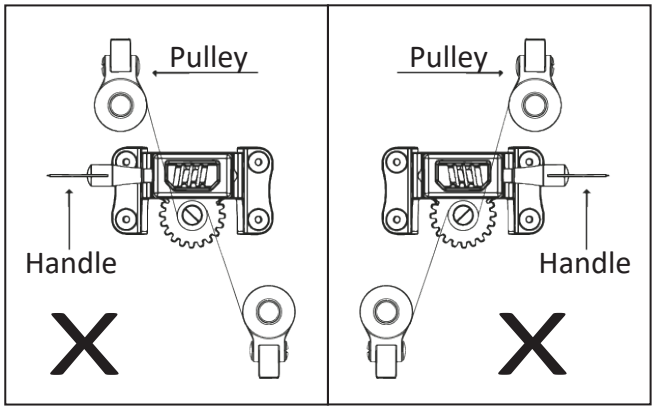


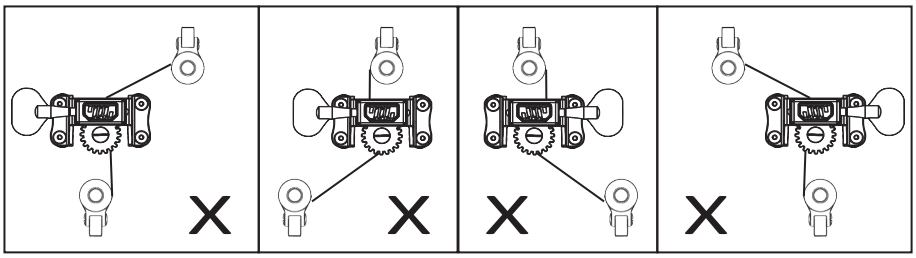

WELCH TUNING SYSTEMS, INC.

# Welch Tuning System™ Owner's Manual

To get the most out of the Welch Tuning System (WTS) premium drum hardware, and use it in a safe manner, we urge you to read this Owner's Manual before using WTS.

The cautions given in the following Safety Precautions section are provided to prevent unexpected injuries or accidents. Please understand each of the cautions and use WTS in a safe and proper manner.

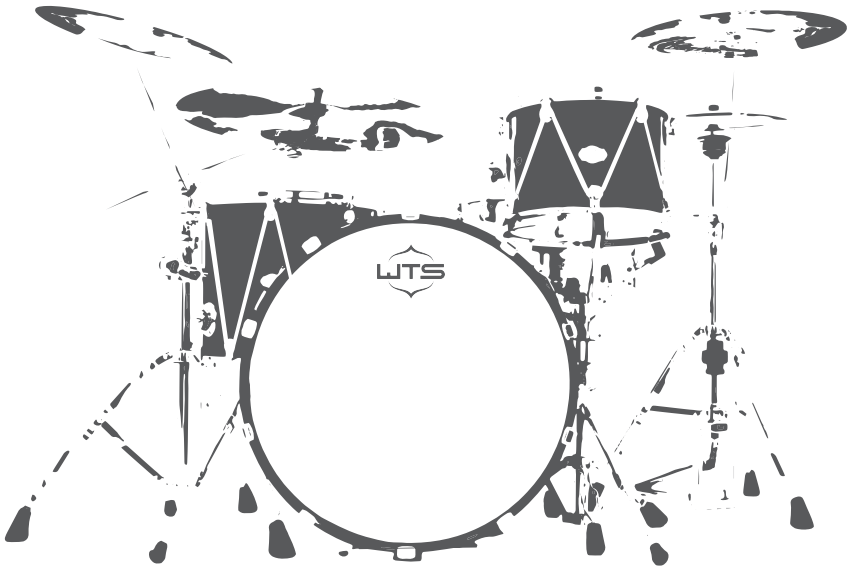

## SAFETY PRECAUTIONS

### Preventing Unexpected Injuries and Accidents

- Never use a damaged or defective cable. Breakage could result in injury. Carefully inspect cable for any flaws or defects prior to assembly.
- Follow all proper cable winding procedures outlined in this manual.
- Always replace cable if damaged or after 6 months of use.
- Never use a tool to assist in tensioning the cable. The tuning knob is designed to be turned by hand only.
- Do not over-tighten drum. When the tone of the drum chokes up or the hoops begin to deform, you are over-tightening the drum.
- Do not place your face close to the instrument when changing or adjusting the cable.
- Cable ends are sharp and can cause injuries.

## TUNING KNOB

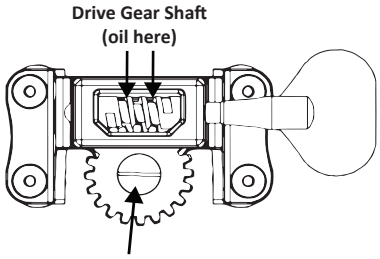


**Break-in period:** New tuning knobs will have a break-in period. In the initial couple of weeks of use, you will notice small metal particles and stiffening of the gear. This is normal. When you notice this, place 2-3 drops of 3-in-1 oil on the drive gear shaft of the tuning knob and use a clean rag to remove any metal residue.

**Friction adjustment:** To lock tension or make the handle harder to turn, lightly snug down the friction adjustment bolt on the front of the gear.

**Caution:** Do not over-oil. Use minimum amount for smooth operation; over-oiling can result in tension slippage.

## PERIODIC MAINTENANCE

To ensure optimal performance from WTS, periodic maintenance is suggested:

**1.** Vibration from drums can sometimes cause bolts to loosen. Check to make sure all pulley assemblies are snug on hoops, and all nuts inside drum shell are snug.

**2.** Inspect that pulley assemblies are clean and free from debris, and that pulleys spin freely.

**3.** Inspect cable for damage and wear. Replace if damaged or after 6 months of use.

## REPLACING HEADS/CABLE

**Video tutorial:** www.wtsdrums.com/how-to-change-drum-heads

or, scan QR code:

**1.** Remove cable from drum by loosening tensioner and unthreading cable from winding post.

**2.** Unlace cable from pulleys, and remove heads.

**3**. If you are replacing the cable, remove the old cable, thread the cut-end of the new cable through the large hole in the winding post, pull the cable through until cast ball stops in receptacle (**Fig. 1**).

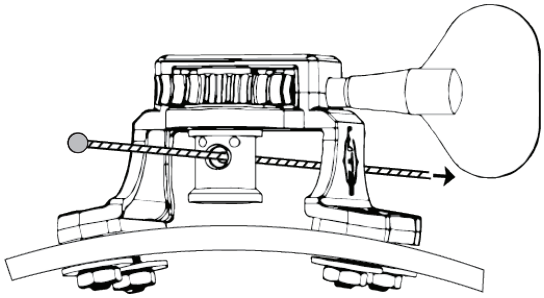

**Fig. 1**

**4.** Before re-assembling the drum, check the Alignment and Assembly guide for each of the drums you are replacing heads (see following pages). Having the proper alignment of the top and bottom hoop is essential for proper assembly.

(Step 5 continues on page 7 following Alignment and Assembly guides.)

# 10” Tom Tom Alignment and Assembly

**1.** Place resonant head into bottom hoop.

**2.** Place shell onto resonant head.

**3.** Place batter head on shell.

**4.** Place top hoop over batter head.

**5.** Align hoops as pictured below, using the badge as a reference point.

**6.** Assemble cable (follow instructions for replacing heads/cable on page 7).

**7.** Check that your fully assembled drum looks like the drawing below.

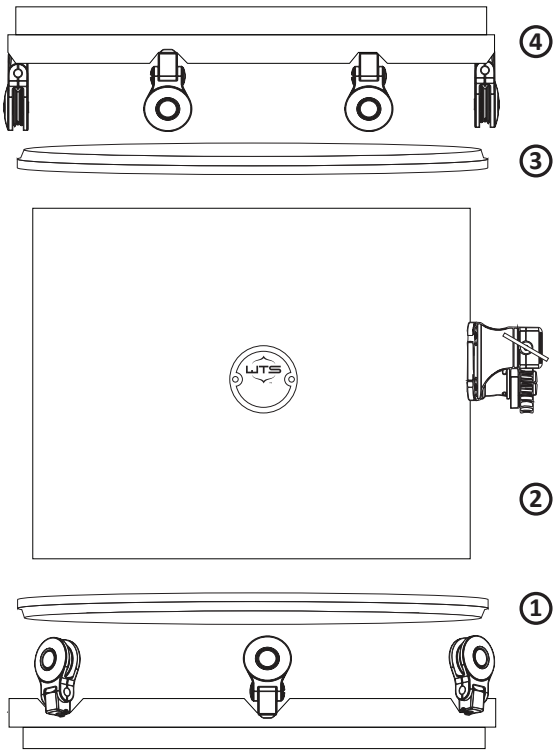


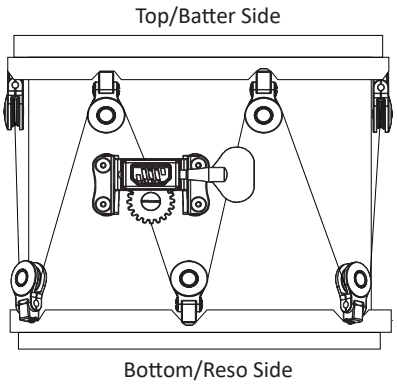


**SIDE VIEW (A)**

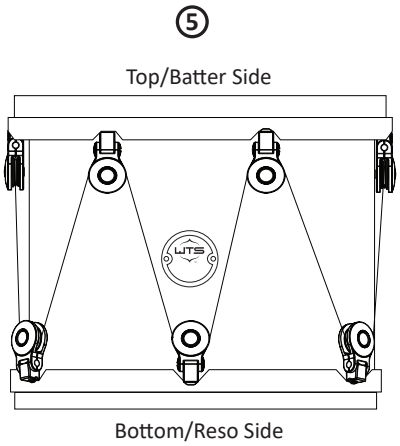


**SIDE VIEW (B)**

# 12” Tom Tom Alignment and Assembly

**1.** Place resonant head into bottom hoop.

**2.** Place shell onto resonant head.

**3.** Place batter head on shell.

**4.** Place top hoop over batter head.

**5.** Align hoops as pictured below, using the badge as a reference point.

**6.** Assemble cable (follow instructions for replacing heads/cable on page 7).

**7.** Check that your fully assembled drum looks like the drawing below.

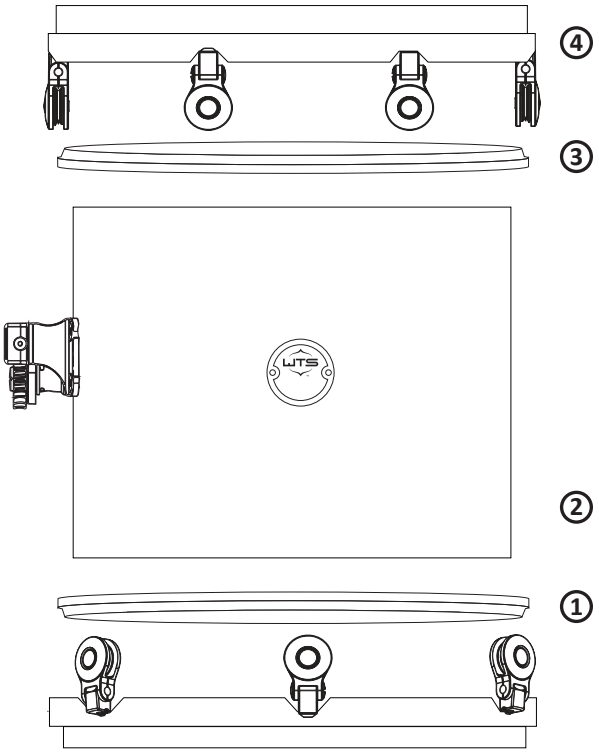


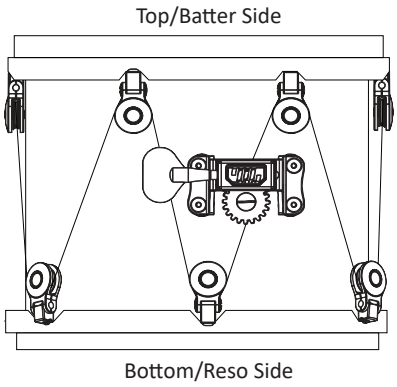


**SIDE VIEW (A)**

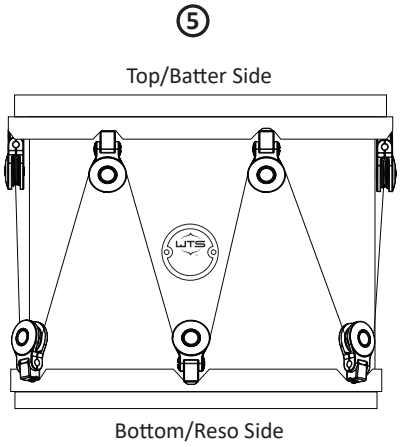


**SIDE VIEW (B)**

## Floor Tom Alignment and Assembly

**1.** Place resonant head into bottom hoop.

**2.** Place shell onto resonant head.

**3.** Place batter head on shell.

**4.** Place top hoop over batter head.

**5.** Align hoops as pictured below, using the badge as a reference point.

**6.** Assemble cable (follow instructions for replacing heads/cable on page 7).

**7.** Check that your fully assembled drum looks like the drawing below.

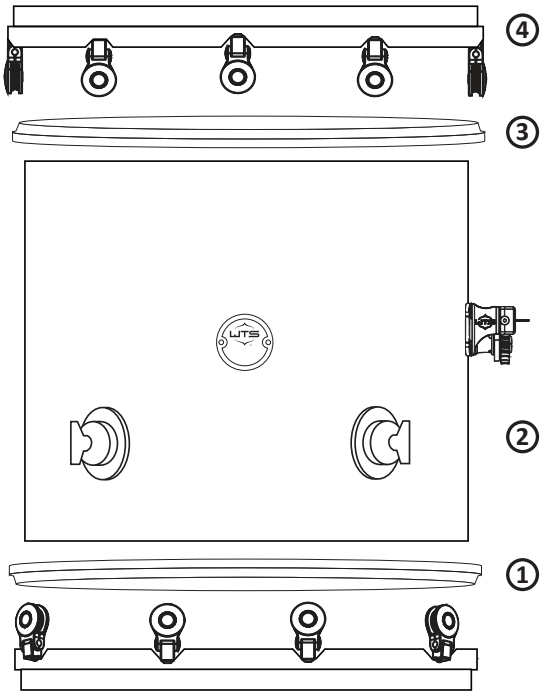


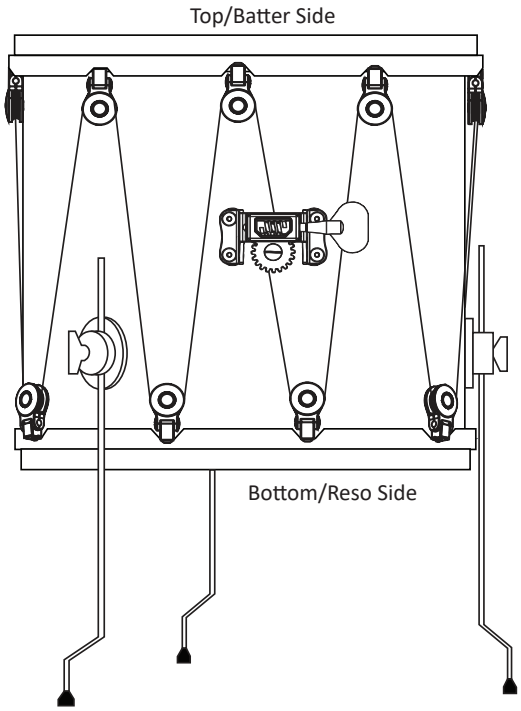


**SIDE VIEW (A)**

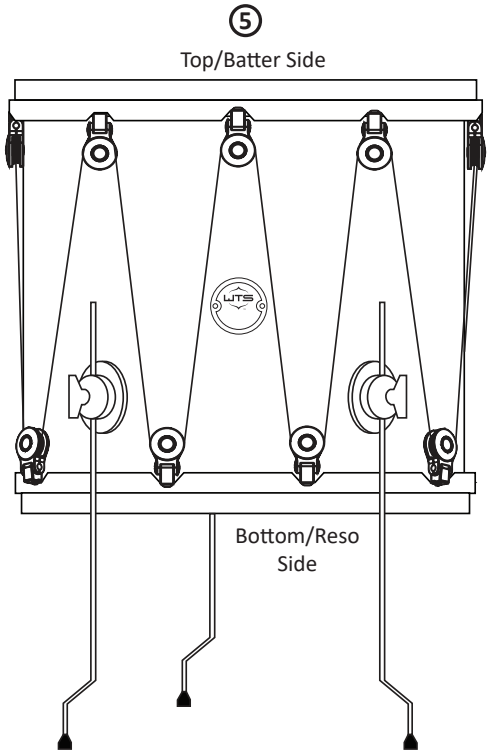


**SIDE VIEW (B)**

## Bass Drum Alignment and Assembly

**1.** Place front hoop on ground and resonant head into front hoop.

**2.** Place shell onto resonant head.

**3.** Place batter head on shell.

**4.** Place batter side hoop over batter head.

**5.** Align hoops as pictured below, using the badge as a reference point.

**6.** Assemble cable (follow instructions for replacing heads/cable on page 7).

**7.** Check that your fully assembled drum looks like the drawing below.

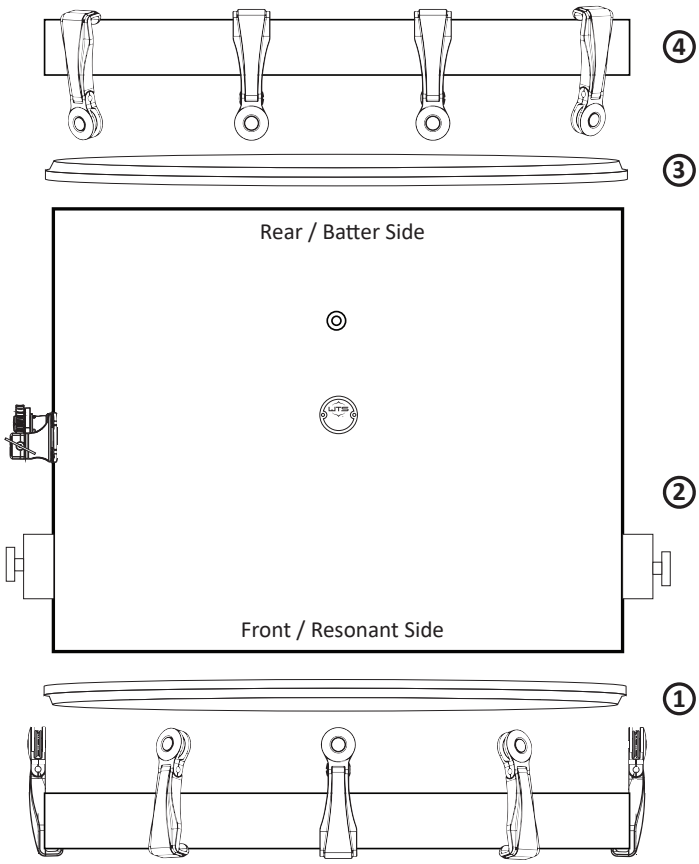


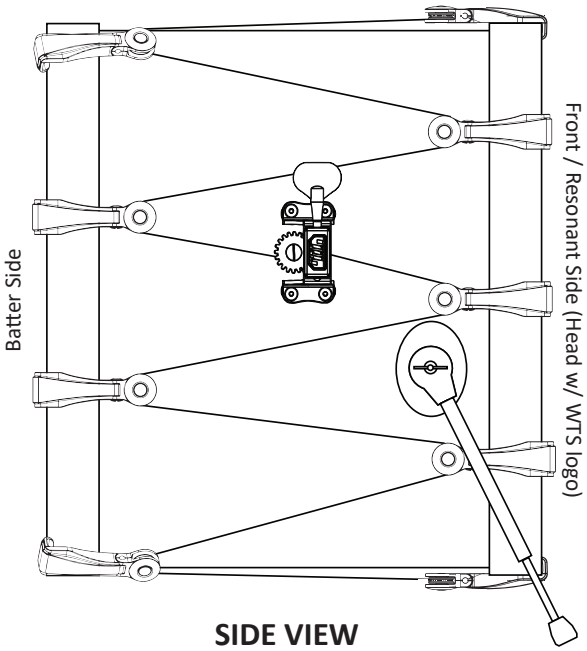


**SIDE VIEW**

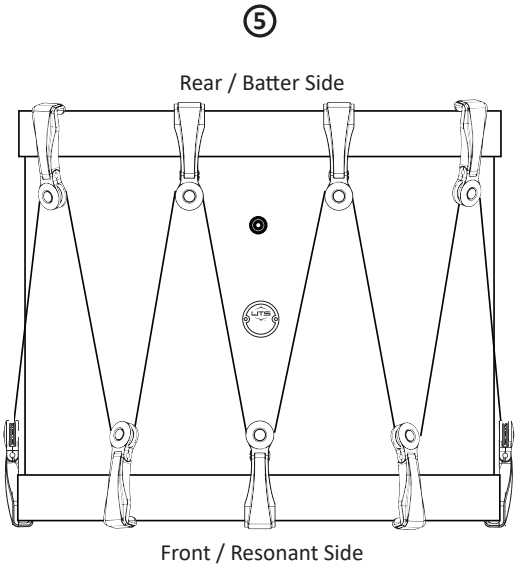


**TOP VIEW**

**5.** Once the hoops are properly aligned (see Alignments and Assembly guides on previous pages), lace cable though pulley fixtures starting with the closest top pulley to the tuning knob, then the next pulley on the opposing hoop, until you have threaded through all of the pulleys (**Fig. 2**).

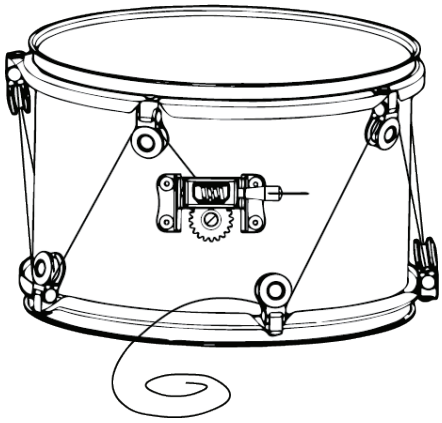

**Fig. 2**

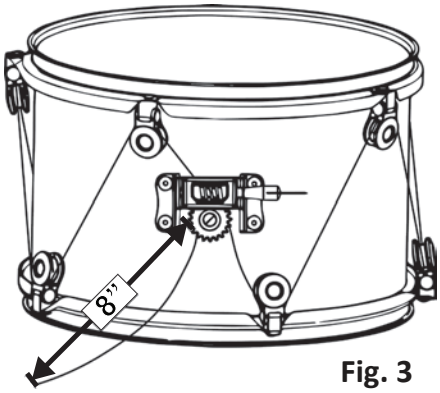


**Fig. 3**

**6.** Drape the cable over the winding post to ensure that you have approximately 8” of cable remaining to wrap around the winding post (**Fig. 3**). If the cable is not long enough, replace it with a new cable.

**NOTE:** If you are using a new cut-to-size cable, measure the cable approximately 8“ - 10” from the winding post and cut with WTS cable cutters (**Fig. 4**). The extra length is necessary to allow the cable to wrap around the winding post multiple times.

**7.** Thread cable through one of the two small holes in the winding post from the same side as the cast ball receptacle (**Fig. 4a**).

Loop the cable back through the second hole (**Fig. 4b**), leave a small tail sticking out the other side (approximately 1/2”).

Pull the cable tight until the cable loop rests in the groove between the two small holes, with the tail end still sticking out (**Fig. 4c**).

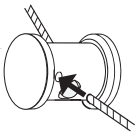

**Fig. 4a**

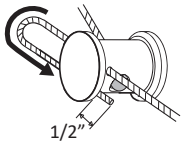


**Fig. 4b**

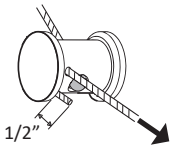


**Fig. 4c**

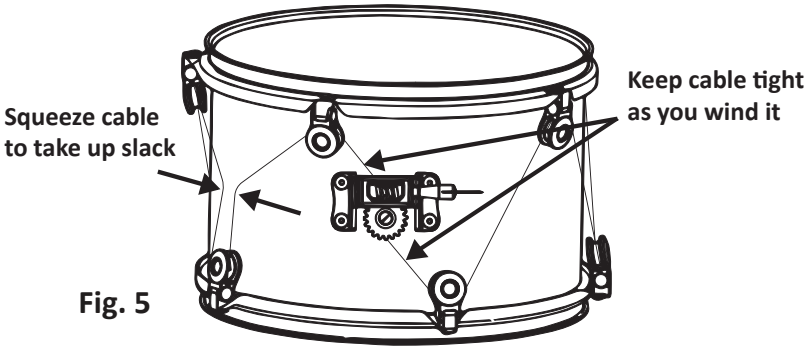


**Fig. 5**

**8.** Take up slack in the cable with a free hand and begin winding the post by turning the handle of the tuning knob clockwise **(Fig. 5)**. Keep the cable taut while winding.

**9.** Guide the cable as you wind it to ensure a tight, even wind **(Fig. 6)**. Be sure that cable winds over itself in the groove of the winding post, and wraps at least 3 full times around the winding post.

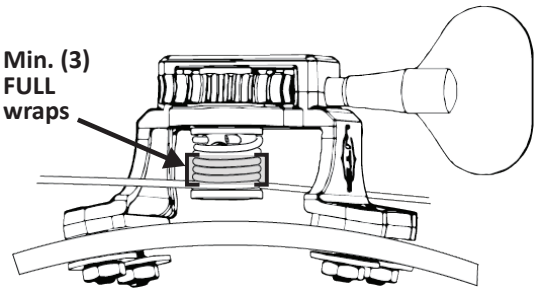


**Fig. 6**

## Note for Snare Drums/High Tension Drums

**When tightening snare heads down for the first time:** Before the cable is tight, flip the drum upside-down and place firm pressure on the resonant-side hoop opposite the tuning knob while tightening the cable to ensure hoops stay parallel (not lopsided).

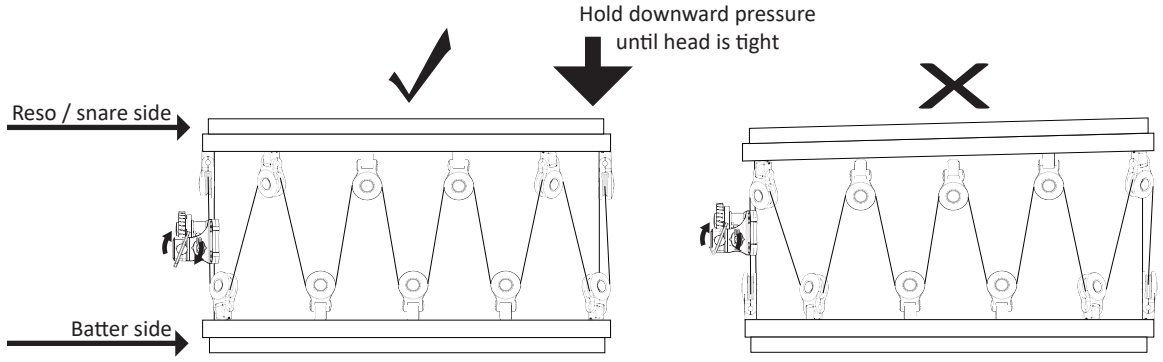


## Helpful Tips & Tricks

**Tips & Tricks video tutorials:** www.wtsdrums.com/how-to-change-drum-heads

or, scan QR code:

**1. Re-using cut-to-size cable:** WTS cable is available in both exact length and cut-to-size cable. For cut-to-size cable, the end of the cable will often fray after it is cut.

- In order to avoid fraying, apply a small drop of super glue to the end of the cable after it is freshly cut.
- Allow the glue to dry before stringing up your drum. This will help prevent cable from fraying which will make future head changes easier, and potentially lengthen the life of the cable.

**2. Setting and re-setting your heads:** WTS is a free floating system; after a while the hoops and heads may shift out of center, which can sometimes cause unwanted overtones.

- When you notice this, simply loosen tension on the drum, re-center the heads and hoops, and re-tighten the drum.
- To keep everything aligned while you tighten the drum back up, you can also apply a small amount of pressure on the hoop opposite the tuning knob (see above Note for Snare Drums/High Tension Drums) .
- Additionally, to get more life out of your drum heads (resonant snare side heads in particular), rotate the heads 180 degrees every so often.

**3. Speeding up head changes with an electric drill:** Often used for guitars, a “Drill Bit Peg Winder” tool easily attaches to your power drill or screwdriver to speed up the WTS cable winding process.

- We highly recommend you use a drill bit peg winder with a rubber coating, operate at slow speeds only, and be careful not to damage the tuning knob in the process.

Find this tool available for purchase at your local music store and online.